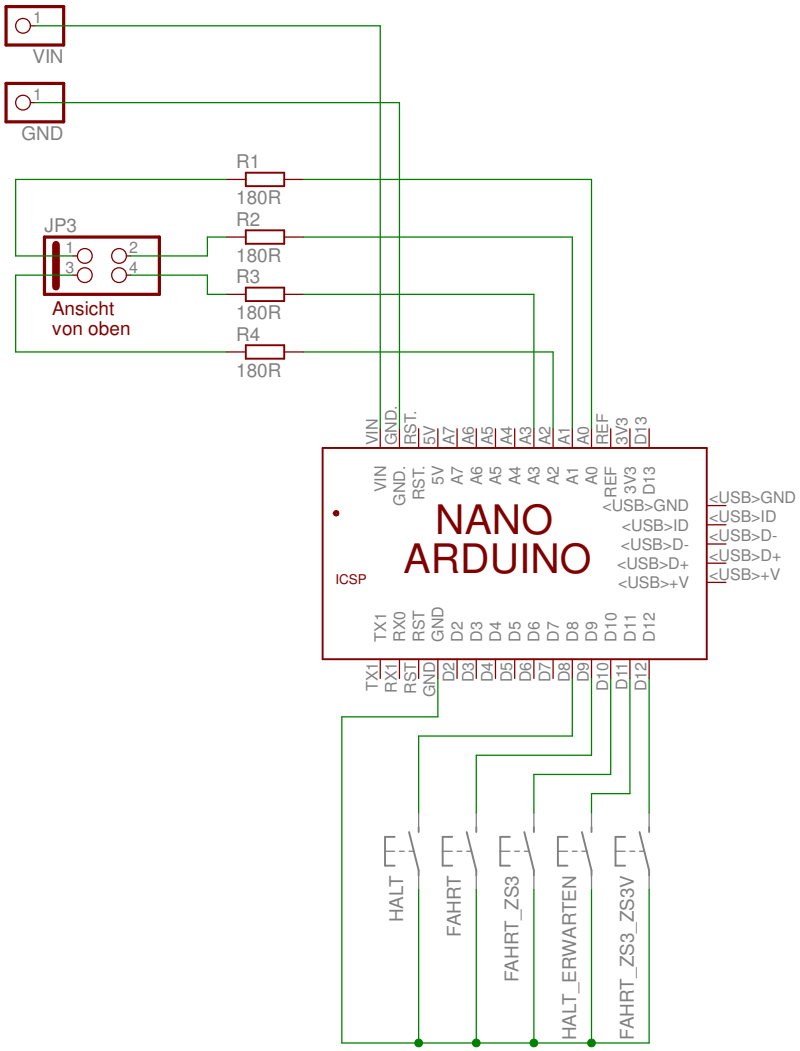

TITLE: CharliePlexigDemo-Nano		
Document Number:		REV:
Date: 09.04.2022 19:05:45	Sheet: 1/1	